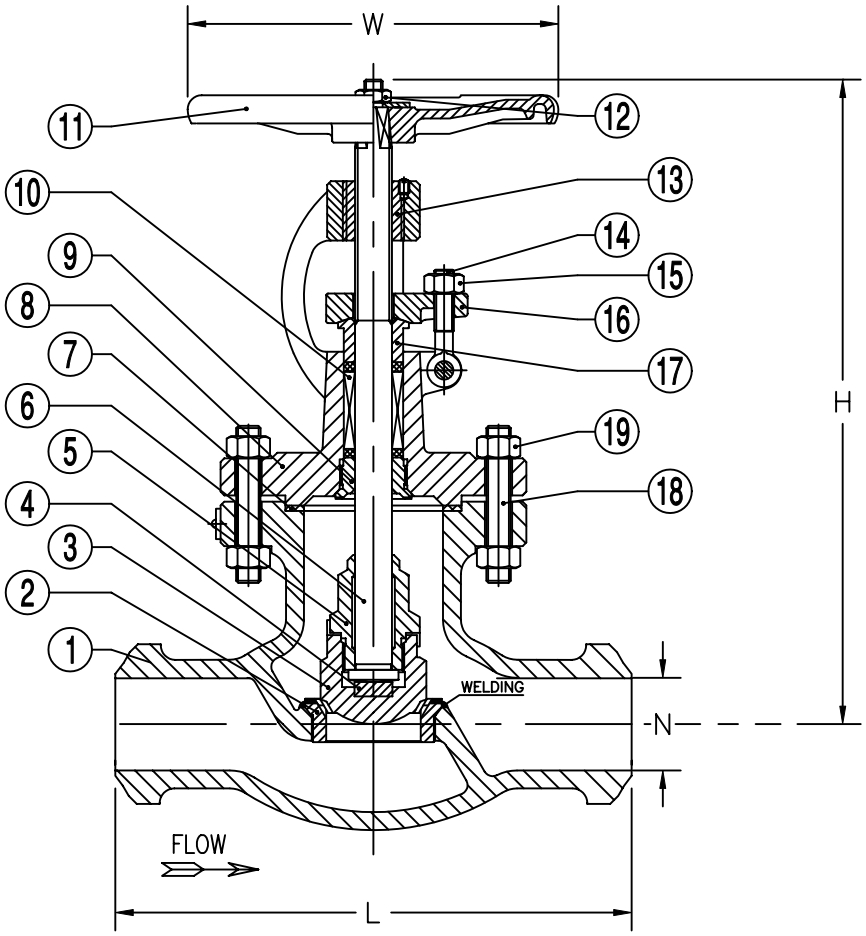

IT.	DESCRIPTION	MATERIAL
1	BODY	ASTM A216 GR. WCB
2	SEAT RING	ASTM A105 + STELLITE
3	DISC	ASTM A105 / 13 CR
4	DISC THRUST PLATE	ASTM A182 GR. F6
5	DISC STEM NUT	ASTM A182 GR. F6
6	STEM	ASTM A182 GR. F6
7	GASKET	316 + GRAPHITE
8	BONNET	ASTM A216 GR. WCB
9	BACK SEAT BUSHING	ASTM A182 GR. F6
10	PACKING	GRAPHITE
11	HANDWHEEL	DUCTILE IRON
12	HANDWHEEL NUT	ASTM A105
13	YOKE SLEEVE NUT	ASTM A439 GR. D2
14	GLAND EYE BOLT	ASTM A197 GR. B7
15	EYE BOLT NUT	ASTM A194 GR. 2H
16	GLAND FLANGE	ASTM A216 GR. WCB
17	PACKING GLAND	ASTM A182 GR. F6
18	BONNET STUD	ASTM A193 GR. B7
19	BONNET NUT	ASTM A194 GR. 2H

SIZE	L	N	W	H
6"	16.0	6	12.2	29.9
150mm	406	152	310	810

STANDARDS	
Design	BS1873, ANSI B16.34
Pressure - Temp. Rating	ANSI B16.34
Face to Face Dimension	ANSI B16.10
Connection	ANSI B16.5
Test & Inspection	API 598

CUSTOMER:

P.O. NUMBER:

TAG NUMBER:

JOB NUMBER:

BB/TRIM: A216 GR. WCB / 13 CR.

BONNEY FORGE

U.S. ROUTE 522 SOUTH
P.O. BOX 330
MOUNT UNION, PA 17066

ABS Quality Evaluations Inc. ★ Quality Assurance Certification ★

ISO 9001
Certificate Number: 30116

GLOBE VALVE
CAST STEEL BOLTED BONNET
ANSI CLASS 150 SIZE 6"

REV	DESCRIPTION	DATE	BY

REVISIONS

DR. BSG	DATE 11-5-99	DRAWING NO. 1-31-BW	REV. 0
APPD. GLW	SCALE NONE		