IT.	DESCRIPTION	MATERIAL
1	BODY	ASTM A216 GR. WCB
2	SEAT RING	ASTM A105 + STELLITE
3	DISC	ASTM A216 WCB/13CR.
4	DISC NUT	ASTM A194 GR. 2H
5	HINGE	ASTM A216 GR. WCB
6	HINGE PIN	ASTM A182 GR. F6
7	COVER	ASTM A216 GR. WCB
8	EYEBOLT	ASTM A193 GR. B7
9	GASKET	316 + GRAPHITE
10	COVER BOLT	ASTM A193 GR. B7
11	COVER NUT	ASTM A194 GR. 2H
12	FLANGE	ASTM A105
13	FLANGE BOLT	ASTM A193 GR. B7
14	FLANGE NUT	ASTM A194 GR. 2H

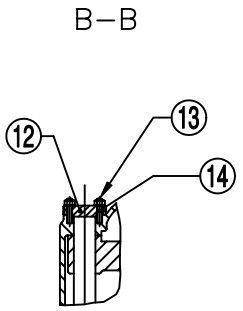

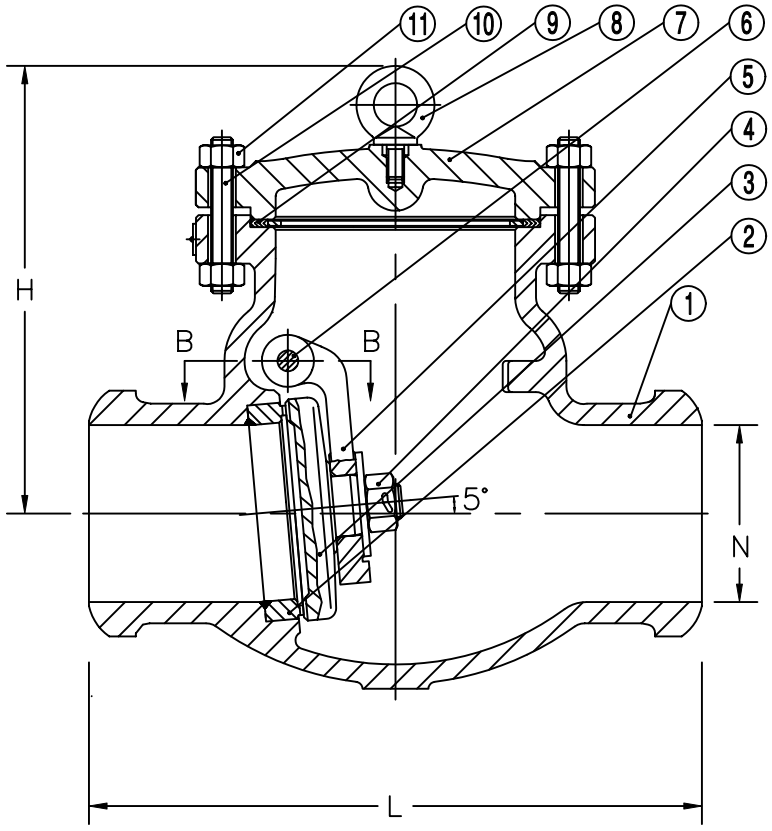

SIZE	L	N	H
16"	36	15.25	23.2
150mm	914	387	590

STANDARDS	
Design	API 6D, ANSI B 16.34
Pressure – Temp. Rating	ANSI B16.34
Face to Face Dimension	ANSI B16.10
Connection	ANSI B16.5
Test & Inspection	API 598

CUSTOMER:

P.O. NUMBER:

TAG NUMBER:

JOB NUMBER:

BB/TRIM: A216 GR. WCB / 13 CR.

BONNEY FORGE

U.S. ROUTE 522 SOUTH
P.O. BOX 330
MOUNT UNION, PA 17066

ABS Quality Evaluations, Inc. ★ Quality Assurance Certification ★

ISO 9001
Certificate Number: 30116

SWING CHECK VALVE
CAST STEEL BOLTED BONNET
ANSI CLASS 150 SIZE 16"

REV	DESCRIPTION	DATE	BY

REVISIONS

DR. BSG	DATE 6-12-00	DRAWING NO. 1-61-BW	REV. 0
APPD. GLW	SCALE NONE		