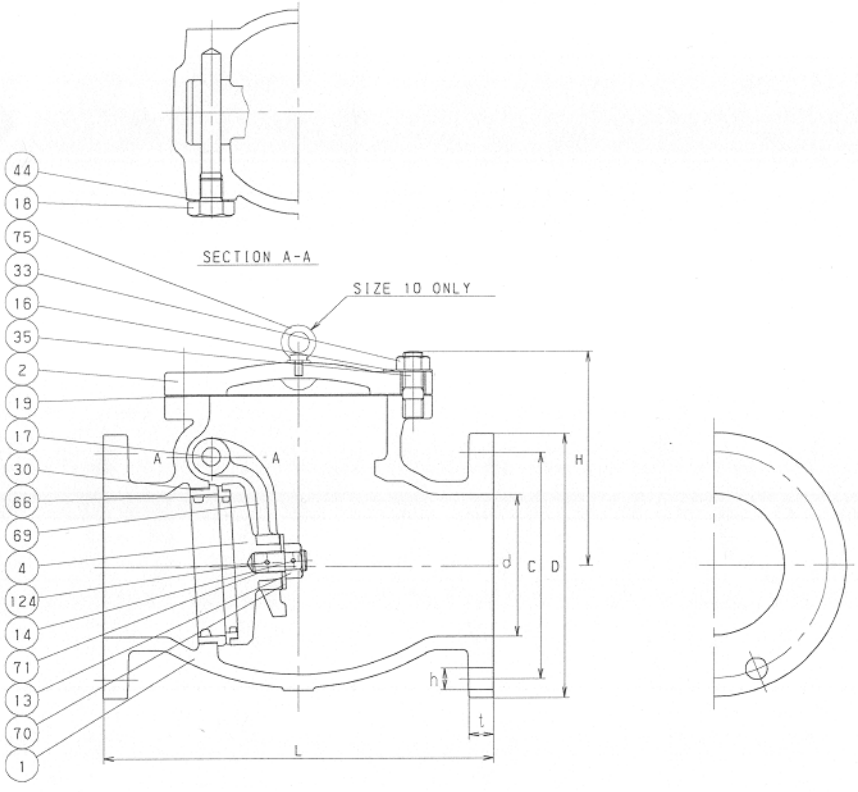

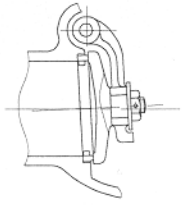

UP TO SIZE 4

ONE SIDE THE OTHER SIDE

MARKING ON THE BODY

NO	NAME OF PARTS	QTY	MATERIALS	SPECIFICATIONS
				ASTM SPEC.
1	BODY	1	CAST IRON	A126 CL. B
2	COVER	1	CAST IRON	A126 CL. B
4	DISC	1	CAST BRONZE	B62
				(SIZE 2-4)
		1	CAST IRON	A126 CL. B
				(SIZE 5-10)
13	DISC NUT	1	CARBON STEEL	
14	SPLIT PIN	1	STAINLESS STEEL	
16	NAME PLATE	1	ALUMINUM	
17	HINGE PIN	1	FORGED BRASS	B124 C37700
18	PLUG	1	CARBON STEEL	
19	GASKET	1	NON ASBESTOS SHEET	
30	BODY SEAT RING	1	CAST BRONZE	B62
33	COVER NUT	1S	CARBON STEEL	
35	COVER BOLT	1S	CARBON STEEL	
44	GASKET	1	SOFT STEEL	
66	DISC SEAT RING	1	CAST BRONZE	B62
69	ARM	1	CAST BRONZE	B62
70	WASHER	1	CARBON STEEL	
71	DISC BOLT	1	CARBON STEEL	
75	EYE BOLT	1	CARBON STEEL	SS400
124	SPRING PIN	1	CARBON STEEL	
			1S=1 SET	

TEST PRESSURE		SHELL	SEAT
	HYDROSTATIC	350 psi	220 psi
	AIR	psi	80 psi

STANDARD		
	FACE TO FACE OR END TO END	ASME B16.10 CLASS 125
	END CONNECTION	ASME B16.1 CLASS 125
	WALL THICKNESS	KITZ STANDARD
	FIGURE	125FCO NO 78

DIMENSIONS UNIT:mm

NOMINAL SIZE					END FLANGE							
						BOLT HOLE			BOLT			
in.	mm	d	H	L	D	C	NO.	h	SIZE	t		
2	50	50	111	203	152	120.5	4	19	5/8	15.9		
2.1/2	65	65	121	216	178	139.5	4	19	5/8	17.5		
3	80	80	145	241	190	152.5	4	19	5/8	19.1		
4	100	100	165	292	229	190.5	8	19	5/8	23.9		
5	125	125	207	330	254	216	8	22	3/4	23.9		
6	150	150	225	356	279	241.5	8	22	3/4	25.4		
8	200	200	268	495	343	298.5	8	22	3/4	28.6		
10	250	250	315	622	406	362	12	25	7/8	30.2		

NOTE (1) VALVE SIZE(inch) IDENTIFICATION.

CLASS 125 CAST IRON SWING CHECK VALVES

BOLTED COVER, FLANGED ENDS.

DATE APPD	MAR. 1. 00	DRAWING NO	
APPD BY	E. KASAHARA	933-B00001	
CHKD BY	Y. HASHIOKA		
DSGND BY	I. TAKANO		
DRAWD BY	K. NAKAYAMA	REV-03	

MARK	DATE	BY
△		
△		
△		
△		

KITZ CORPORATION

KITZ